Description

The ESD15V01 is a bi-directional TVS diode, utilizing leading monolithic silicon technology to provide fast response time and low ESD clamping voltage, making this device an ideal solution for protecting voltage sensitive data and power line. The ESD15V01 complies with the IEC 61000-4-2 (ESD) standard with ±15 kV air and ±15 kV contact discharge. It is assembled into an ultra-small 1.0x0.6x0.5mm lead-free DFN package. The small size and high ESD surge protection make ESD15V01 an ideal choice to protect cell phone, digital cameras, audio players and many other portable applications.

Features

- Ultra small package: 1.0x0.6x0.5mm
- Ultra low capacitance: 0.5pF typical
- Protects one date or power line
- Working voltage: 15V
- Low clamping voltage
- 2-pin leadless package
- Complies with following standards:
  - IEC 61000-4-2 (ESD) immunity test
    Air discharge: ±15kV
    Contact discharge: ±15kV
  - IEC61000-4-4 (EFT) 10A (5/50ns)
  - IEC61000-4-5 (EFT) 2.5A (8/20us)
- RoHS Compliant

Dimensions & Symbol（Unit: mm Max）

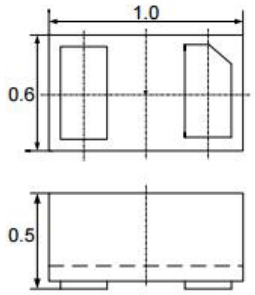

Package Dimensions

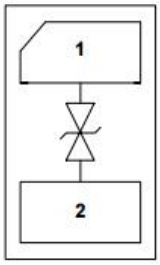

Circuit and Pin Schematic

Mechanical Characteristics

- Package: DFN1006-2 (1.0×0.6×0.5mm)
- Lead Finish: NiPdAu
- Case Material: “Green” Molding Compound.
- UL Flammability Classification Rating 94V-0
- Moisture Sensitivity: Level 3 per J-STD-020
- Terminal Connections: See Diagram Below
- Marking Information: See Below

Applications

- Cellular Handsets and Accessories
- Personal Digital Assistants
- Notebooks and Handhelds
- Portable Instrumentation
- Digital Cameras
- Peripherals
- Audio Players
- Keypads, Side Keys, LCD Displays

Marking Information

Part Number	Packaging	Reel Size
ESD15V01	10000/Tape & Reel	7 inch

Absolute Maximum Ratings (T_A=25ºC, RH=45%-75%, unless otherwise noted)

Parameter	Symbol	Value	Unit
Peak Pulse Power(tp=8/20uS waveform)	P_{PPP}	90	W
Peak Pulse Current(tp=8/20uS waveform)	I_{PP}	2.5	A
ESD per IEC 61000−4−2 (Air) ESD per IEC 61000−4−2 (Contact)	V_{ESD}	±15	kV
Operating Temperature Range	T_J	−55 to +125	°C
Storage Temperature Range	Tstg	−55 to +150	°C

Electrical Characteristics (T_A=25℃)

Parameter	Symbol	Min	Typ	Max	Unit	Test Condition
Reverse Working Voltage	V_{RWM}			15	V	
Breakdown Voltage	V_{BR}	16.7		26	V	I_T = 1mA
Reverse Leakage Current	I_R			0.2	μA	V_{RWM} = 15 V
Clamping Voltage	V_C			30	V	I_{PP} = 1A (8 x 20μs pulse)
Clamping Voltage	V_C			35	V	I_{PP} = 7A (8 x 20μs pulse)
Junction Capacitance	C_J		0.5		pF	VR = 0V, f = 1MHz

Soldering Parameters

Reflow Condition		Pb-Free assembly (see as bellow)
Pre Heat	-Temperature Min ($T_{s(min)}$)	+150℃
	-Temperature Max($T_{s(max)}$)	+200℃
	-Time (Min to Max) (ts)	60-180 secs.
Average ramp up rate (Liquid us Temp (T_L) to peak)		3℃/sec. Max
$T_{s(max)}$ to T_L - Ramp-up Rate		3℃/sec. Max
Reflow	-Temperature(T_L) (Liquid us)	+217℃
	-Temperature(t_L)	60-150 secs.
Peak Temp (T_p)		+260(+0/-5)℃
Time within 5℃ of actual Peak Temp (t_p)		30 secs. Max
Ramp-down Rate		6℃/sec. Max
Time 25℃ to Peak Temp (T_P)		8 min. Max
Do not exceed		+260℃

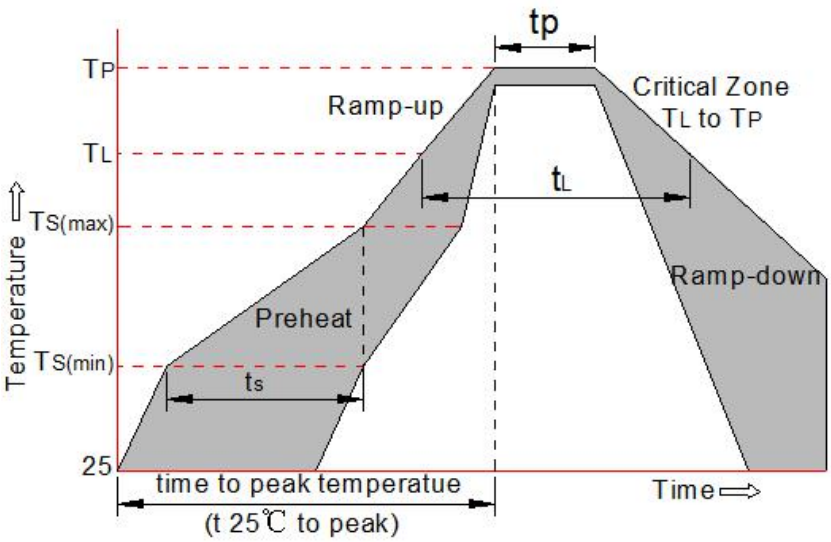

Package Mechanical Data

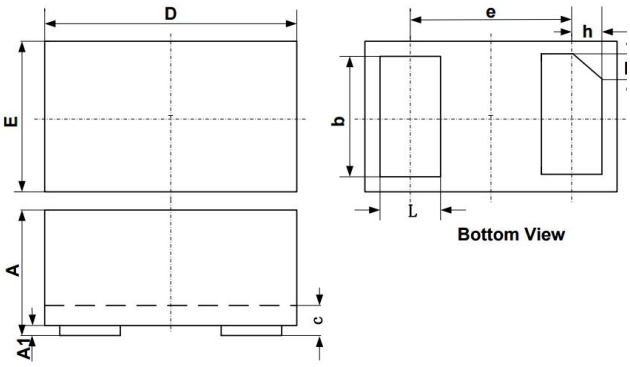

SYM	DIMENSIONS					
	MILLIMETERS			INCHES		
	MIN	NOM	MAX	MIN	NOM	MAX
A	0.45	0.50	0.55	0.018	0.020	0.022
A1	0.00	0.02	0.05	0.000	0.001	0.002
b	0.45	0.50	0.55	0.018	0.020	0.022
c	0.12	0.15	0.18	0.005	0.006	0.007
D	0.95	1.00	1.05	0.037	0.039	0.041
e	0.65 BSC			0.026 BSC		
E	0.55	0.60	0.65	0.022	0.024	0.026
L	0.20	0.25	0.30	0.008	0.010	0.012
h	0.07	0.12	0.17	0.003	0.005	0.007

Suggested Land Pattern

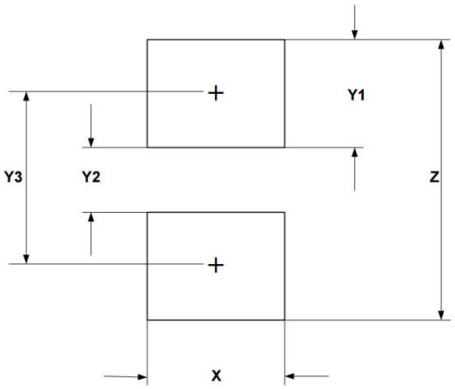

SYM	DIMENSIONS	
	MILLIMETERS	INCHES
X	0.60	0.024
Y1	0.50	0.020
Y2	0.30	0.012
Y3	0.80	0.032
Z	1.30	0.052